The software and solutions for express processing of the raw list mode data measured on the neutron spectrometers of the IBR-2 reactor using a delay line position-sensitive detector as designed to be integrated into the experiment control system

V.Bodnarchuk,
A.Bogdzel,
A.Churakov,
V.Drozdov ,
I.Gapon ,
S.Kulikov ,
E.Litvinenko,
S.Murashkevich,
A.Nagornyi

Outline

I. Introduction & Motivation
II. Comparative study
III. Study conclusions
IV. Software task definition
V. Software solutions
VI. Conclusions

Abstract

Recently we have performed a comparative study of the characteristics of the data acquisition systems for the position-sensitive detectors with a delay line operating on the neutron instruments of the IBR-2 reactor. As a result, to have an optimal version of electronics we have chosen two directions of further development: the DeLiDAQ-2 system for high-flux measurements and the CAEN N6730 digitizer-based system for high-precision experiments. The study has also revealed an urgent need to integrate list mode measurements into the experiment control system on some of the neutron spectrometers. So far, the experiment control system SONIX operating on most of the IBR-2 spectrometers has received and displayed the data measured in the histogram mode. The report, besides the results of the comparative study also describes the software that is developed to solve the task of formation of events from raw data, their sorting, selecting by appropriate criteria, histogramming and to be appropriate for integration into the SONIX. The proposed solutions are not limited to any specific types of electronics for PSD.

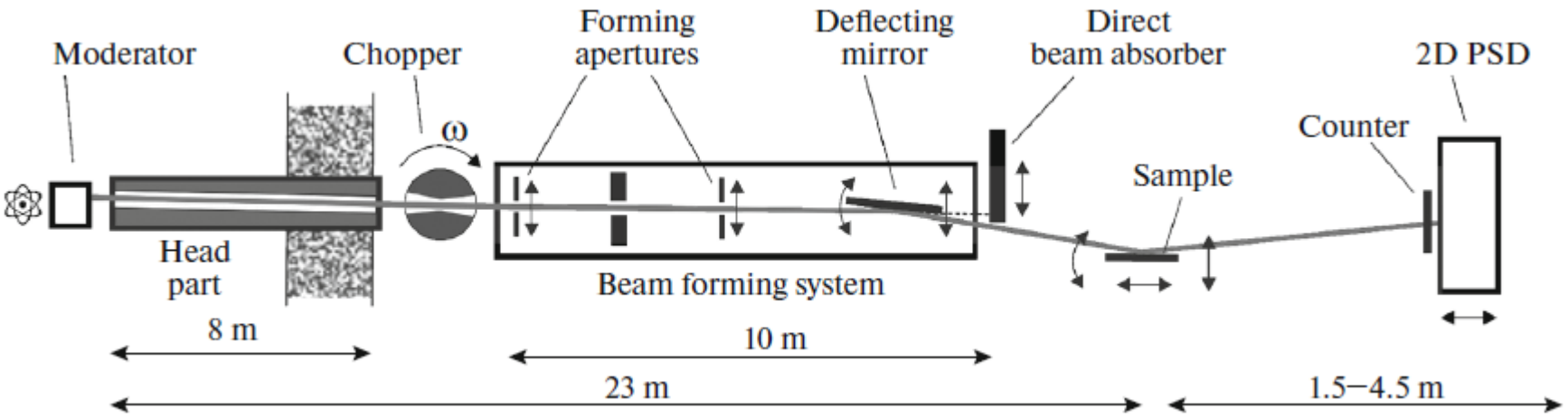

Introduction & Motivation

A

A. **DeLiDAQ-1** board with PCI interface (since 2005)

B

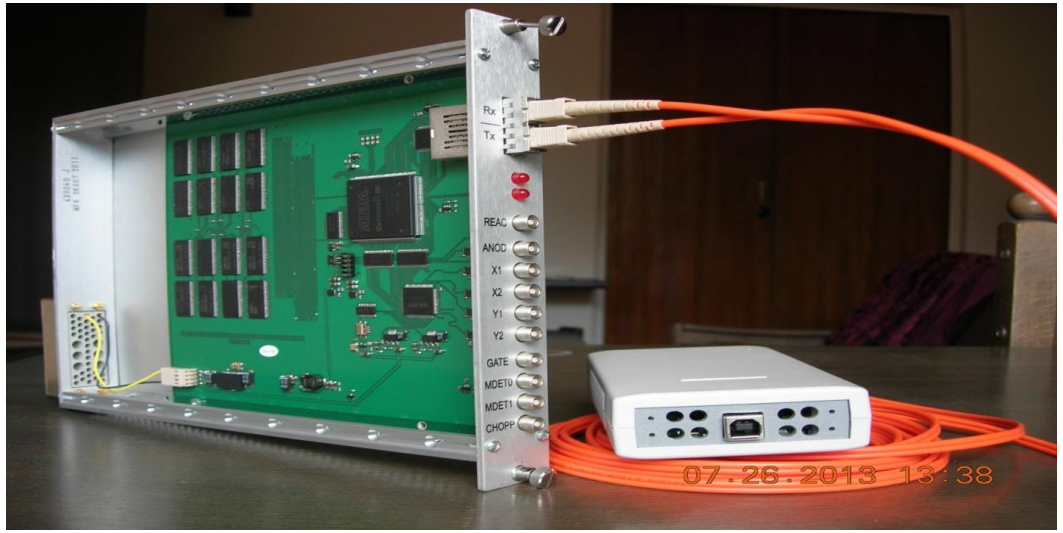

B. **DeLiDAQ-2** board and F-Link box with USB interface (since 2013)

C

C. **CAEN N6730** digitizer - general view on the left, view with connected signals on the right (since 2018)

Introduction & Motivation

A

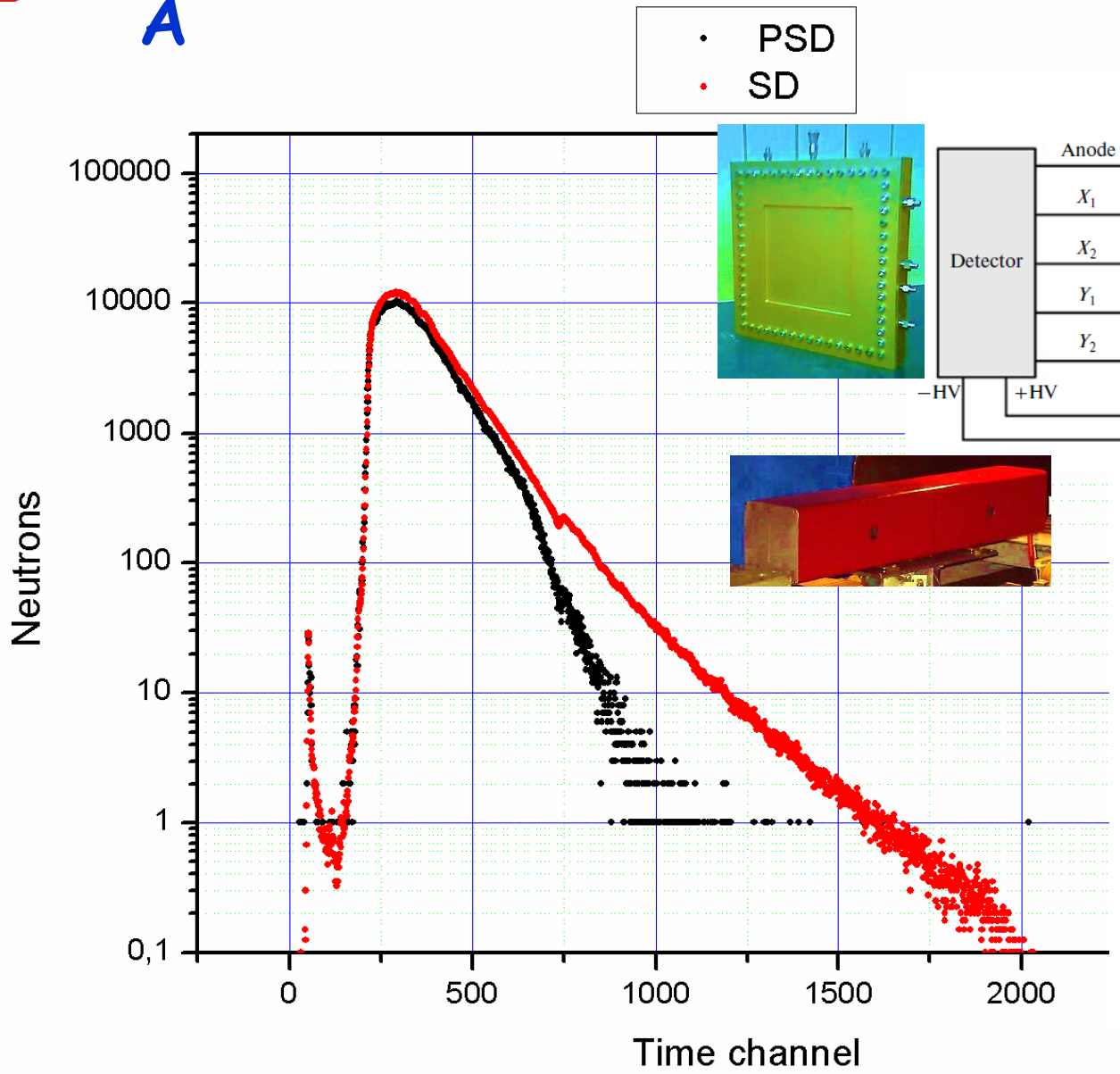

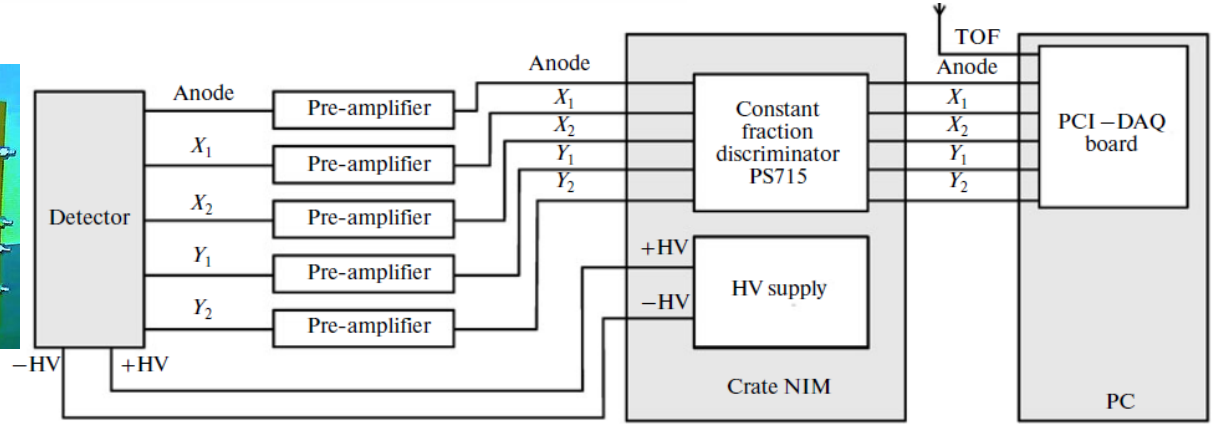

Reflectometry complex at IBR-2

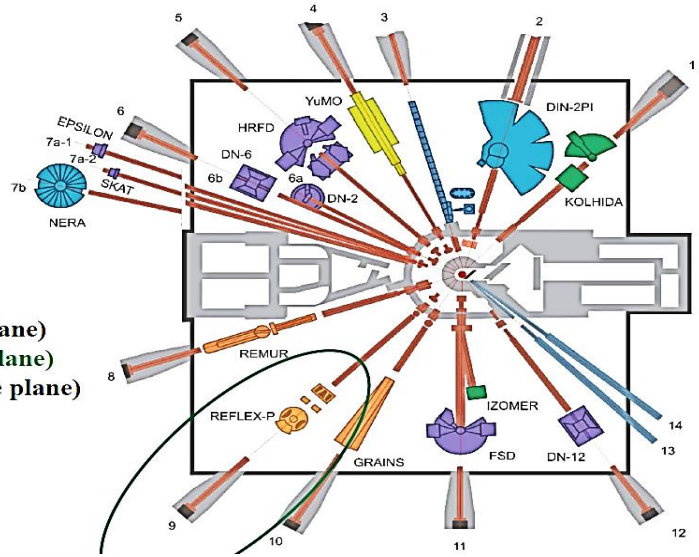

TOF reflectometers:

REMUR (vertical sample plane)
REFLEX (vertical sample plane)
GRAINS (horizontal sample plane)

A. Distortions of the tail parts of the TOF spectra of the direct beam measured on the reactor beam 9 using DeLiDAQ-1 electronics (“PSD”) in comparison with point detector (“SD”) at high input load.

Introduction & Motivation

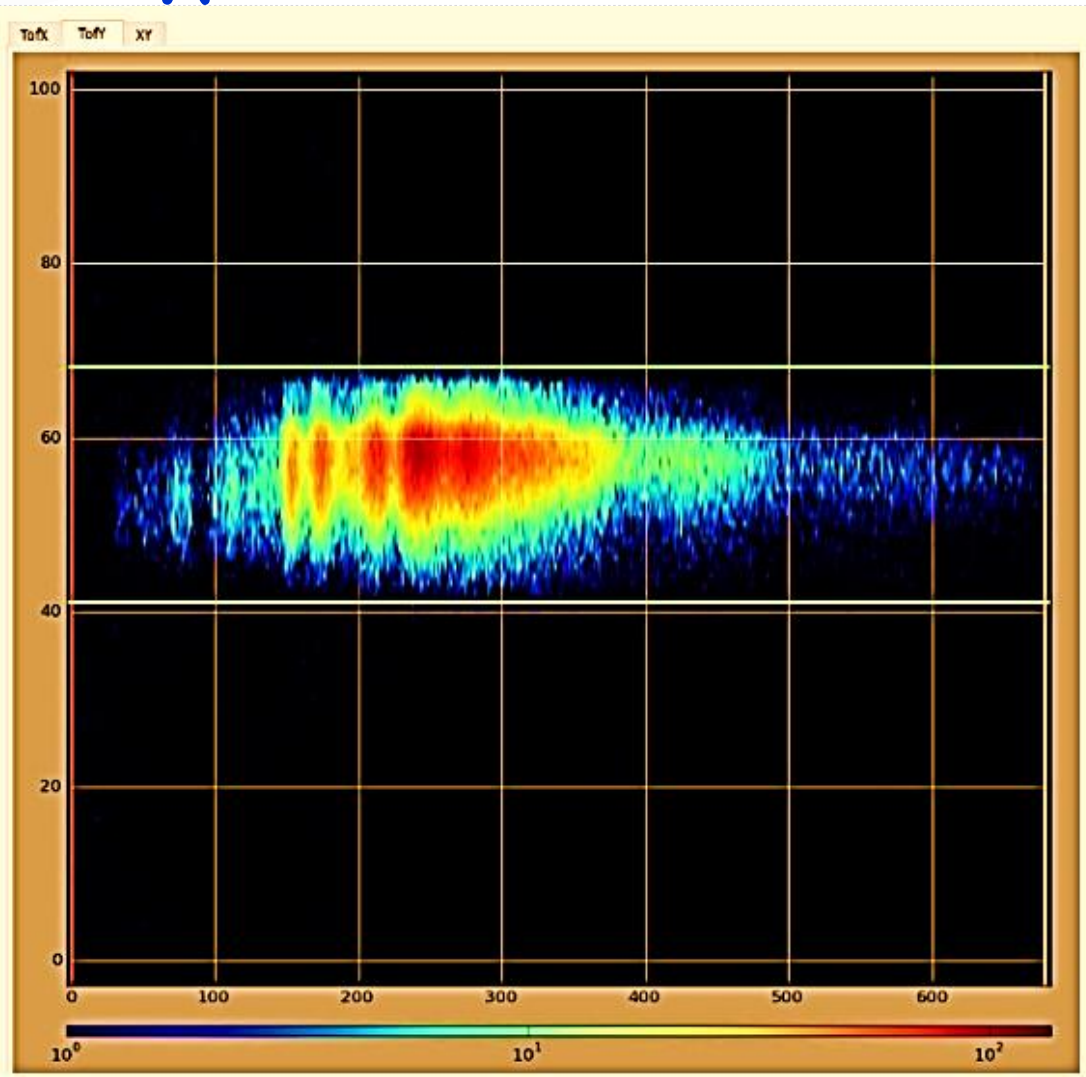

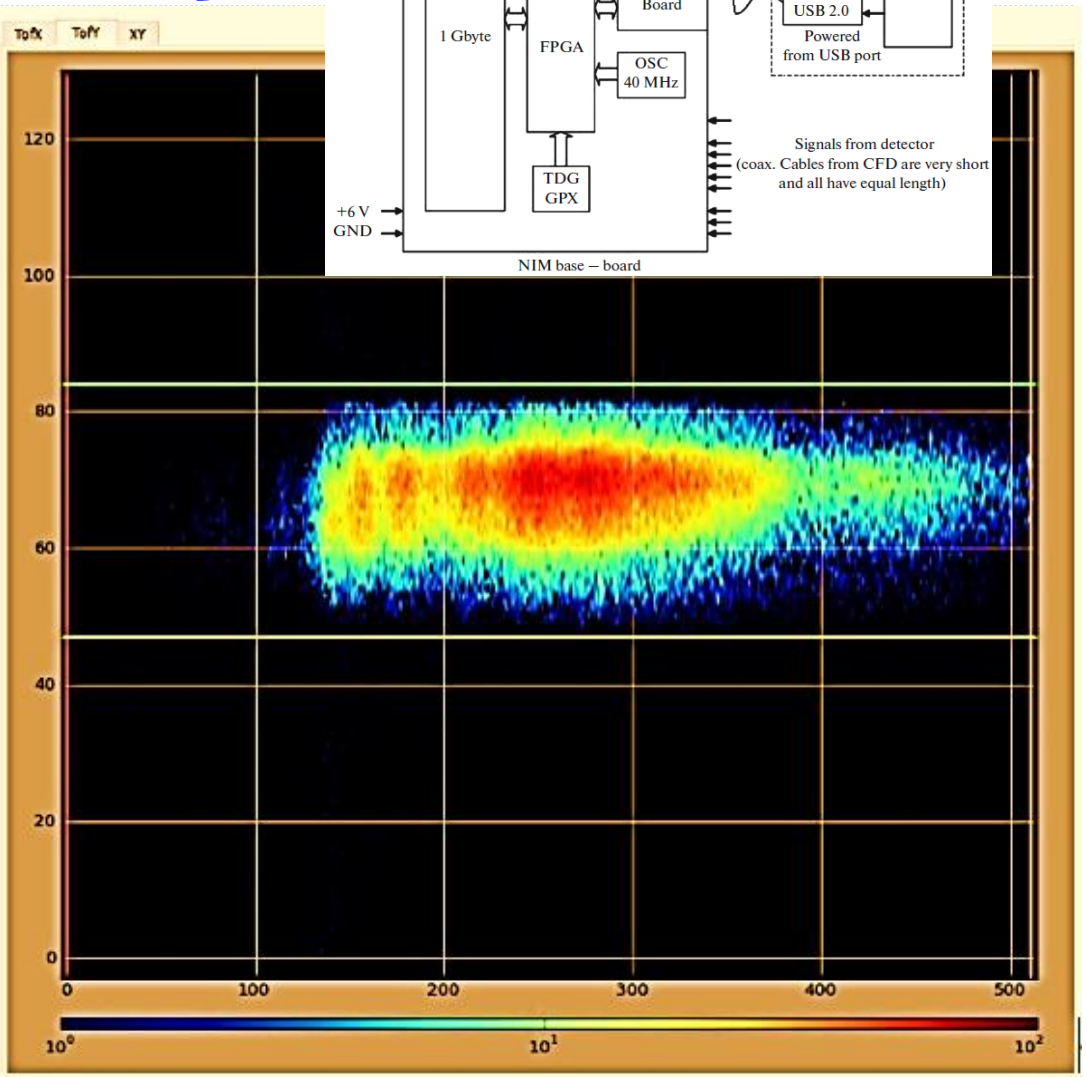

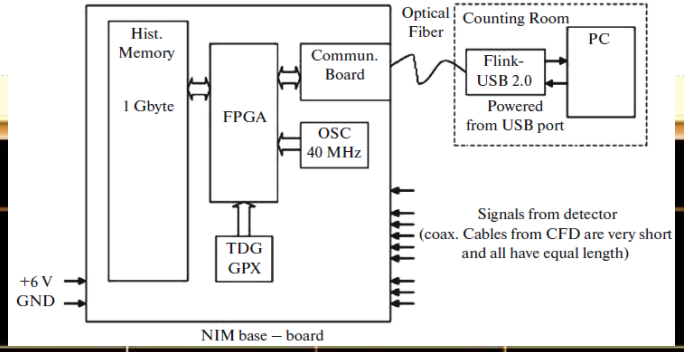

B. Distortion of the y-tof spectra of the sample measured on the Beam 8 using DeLiDAQ-2 electronics (at the right) in comparison with DeLiDAQ-1 (at the left) for very low input load. Thanks to Vladimir Zhaketov for providing this data.

A+B+C+D

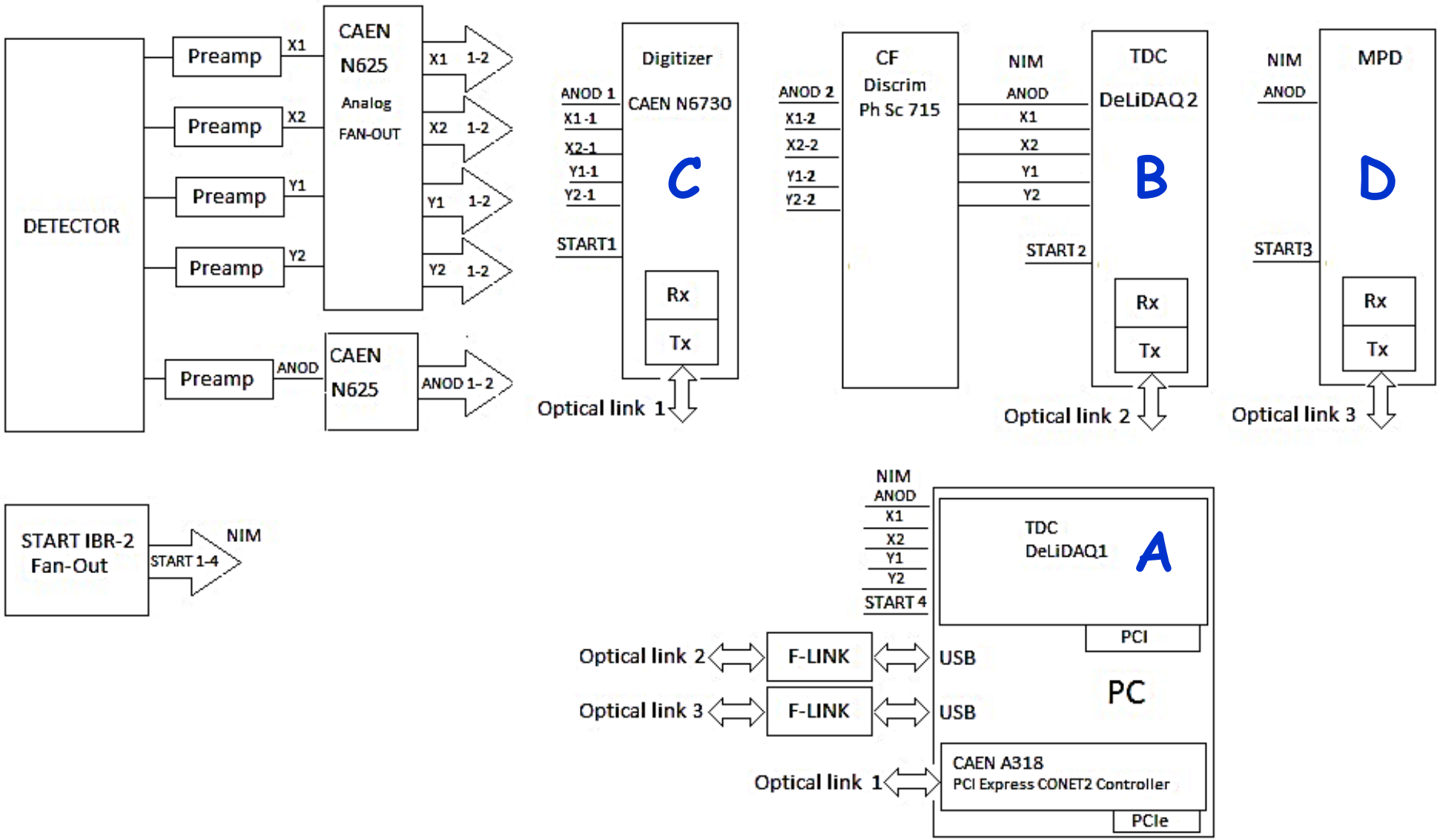

A+B+C+D. Schematic diagram of the parallelization of signals from the detector

Comparative study

Comparative study

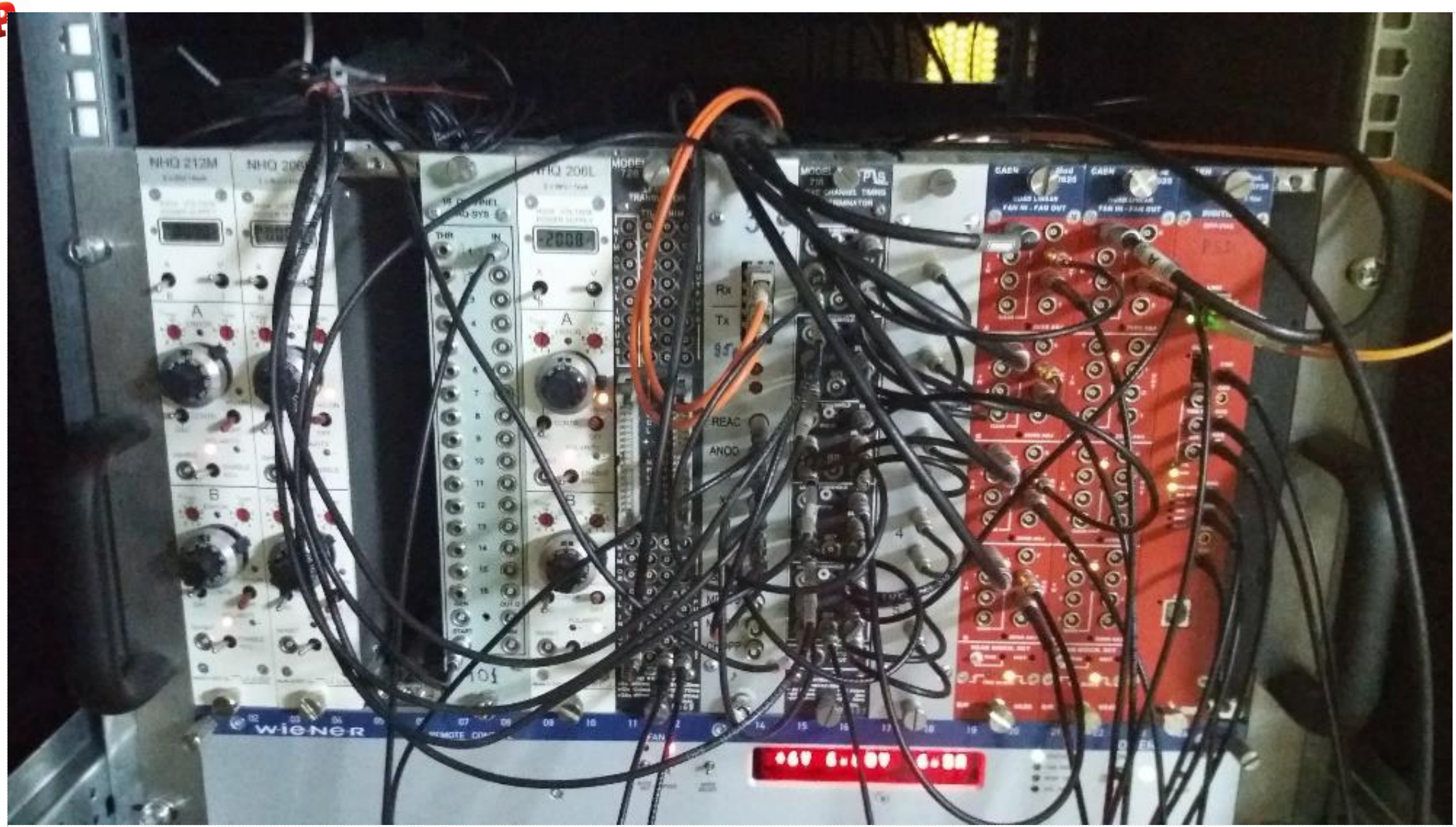

B+C+D. NIM crate with parallel measurement electronics

Comparative study

Mode description: \ System:	DeLiDAQ-1	DeLiDAQ-2	Digitizer
histograms calculated by the firmware from raw event data sorted and filtered by the FPGA	Hist_A	Hist_B (before modernization)	-
histograms calculated by software from raw event data sorted and filtered by the FPGA	LM_A	LM_B (before modernization)	-
histograms computed by the software from the raw event data sorted by the FPGA and then filtered by the software	LM_A_raw	LM_B_Level2 (after modernization)	-
histograms calculated by the software from raw event data sorted and filtered by the software	-	-	LM_C

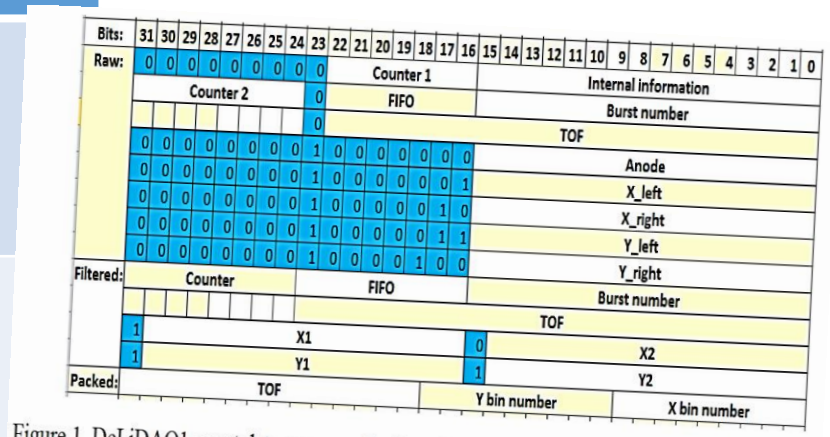

Figure 1. DeLiDAQ1 event data structure for three list mode options. Bits marked as blue are used detect the header and coordinates in the data stream.

Modernization of DeLiDAQ-2 in 2018 – upgrade of the firmware to support long-time list mode measurements

A+B+C. Available system modes used in our measurements (with the abbreviated names)

Comparative study

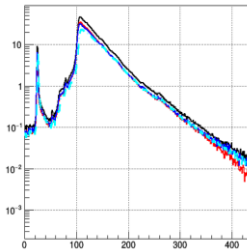

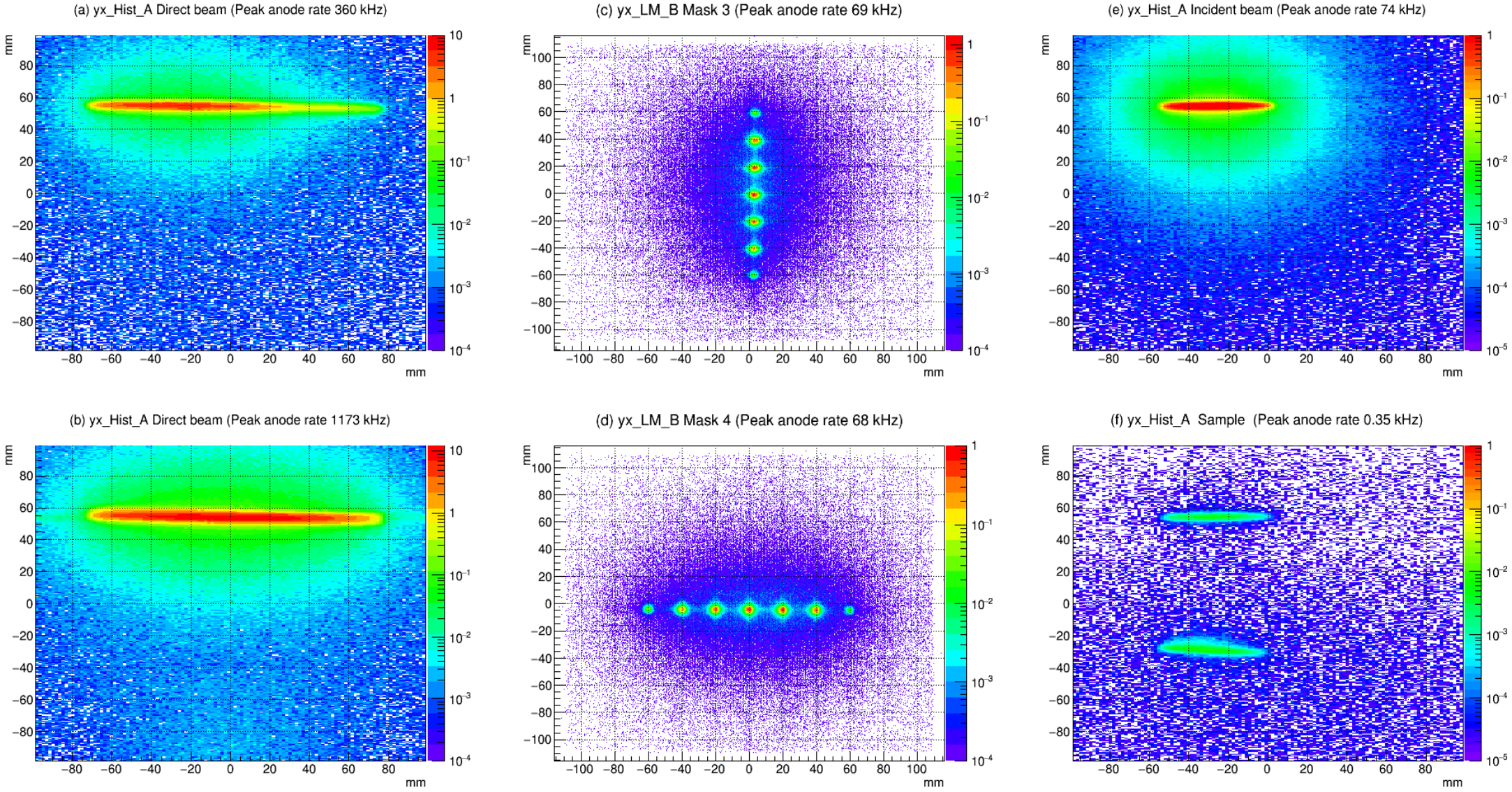

A+B. Raw positional spectra in the measurements on the Beam 10: (a,b) – the first and the last step in the scan of the direct beam with incrementally growing input flow level; (c,d) – vertical and horizontal cadmium masks; (e,f) – the reflectivity measurements.

Comparative study

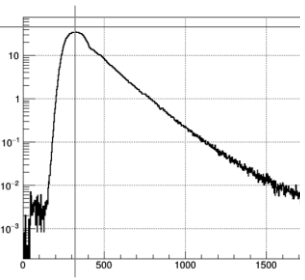

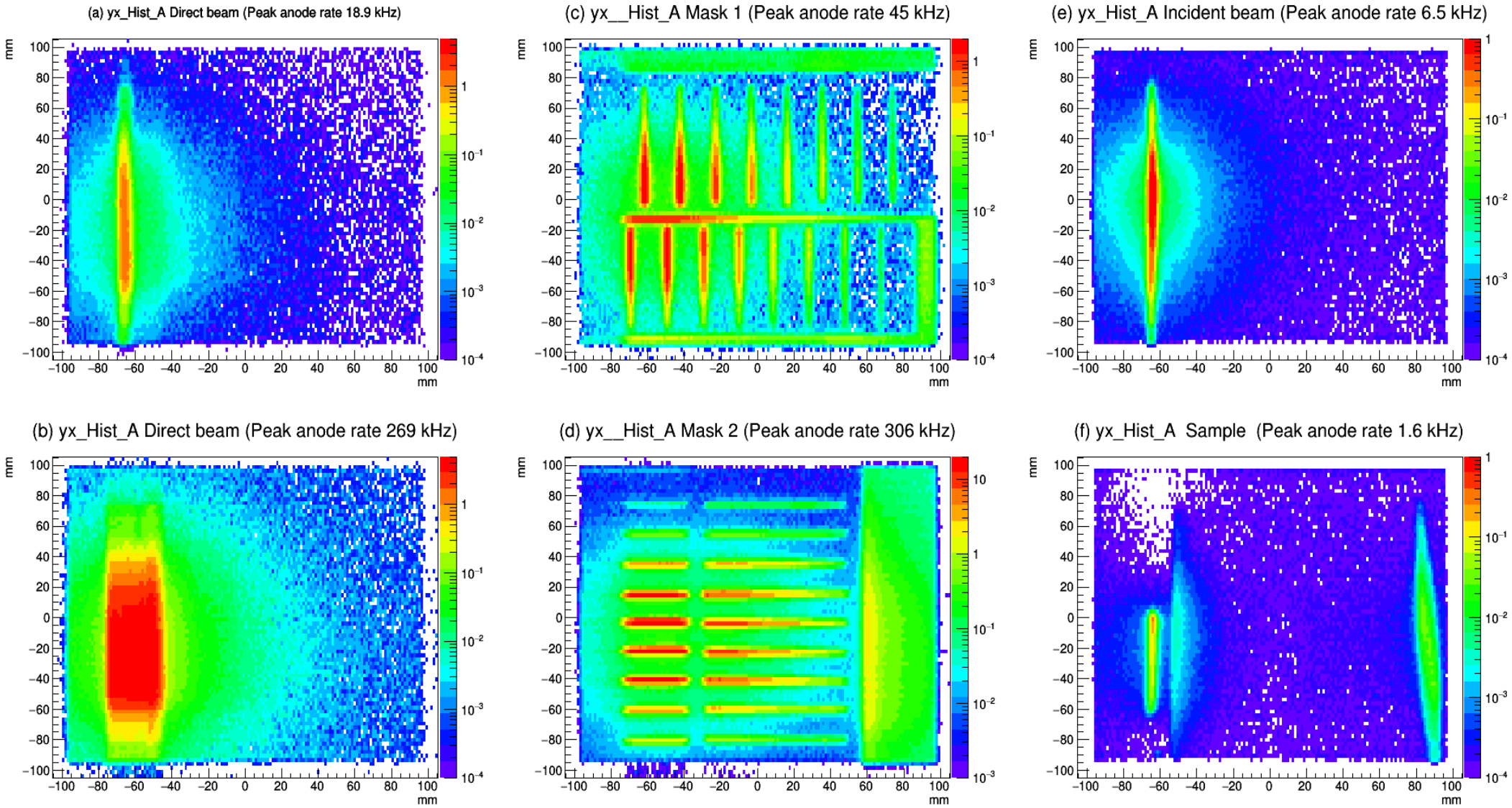

A. Raw positional spectra in the measurements on the Beam 9: (a,b) – the first and the last step in the scan of the direct beam with incrementally growing input flow level; (c,d) – vertical and horizontal cadmium masks; (e,f) – the reflectivity measurements.

Comparative study

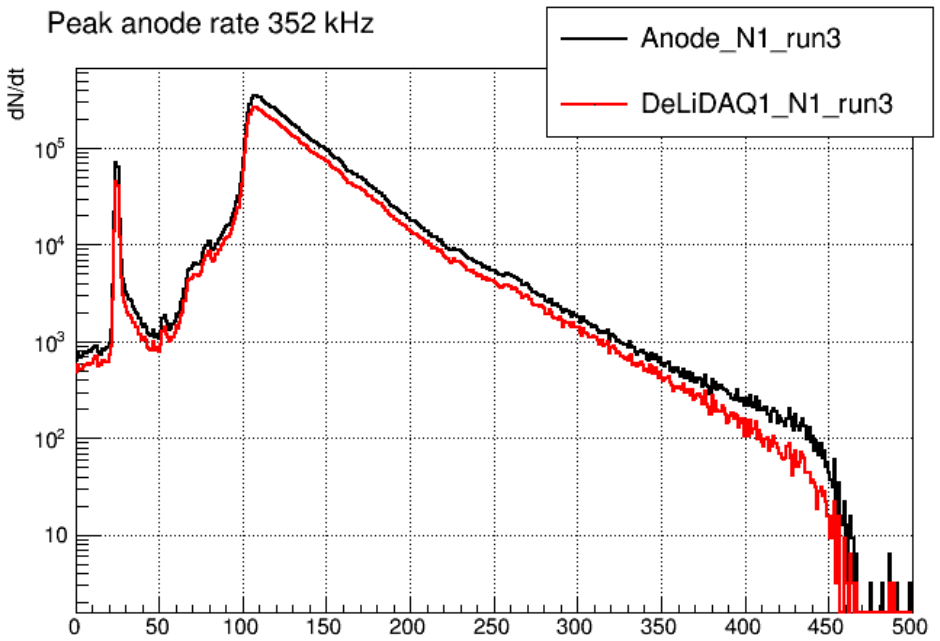

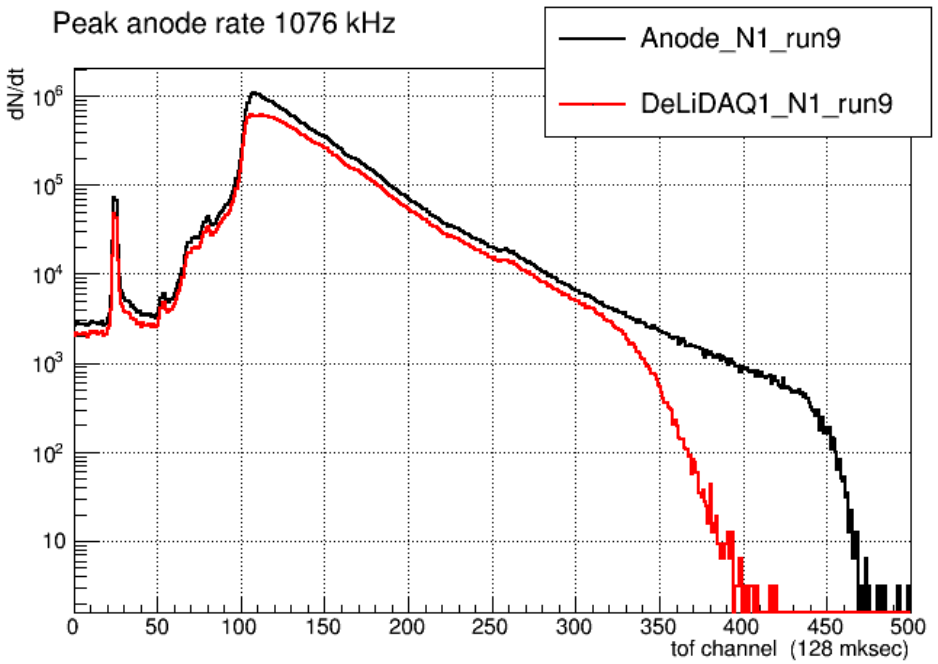

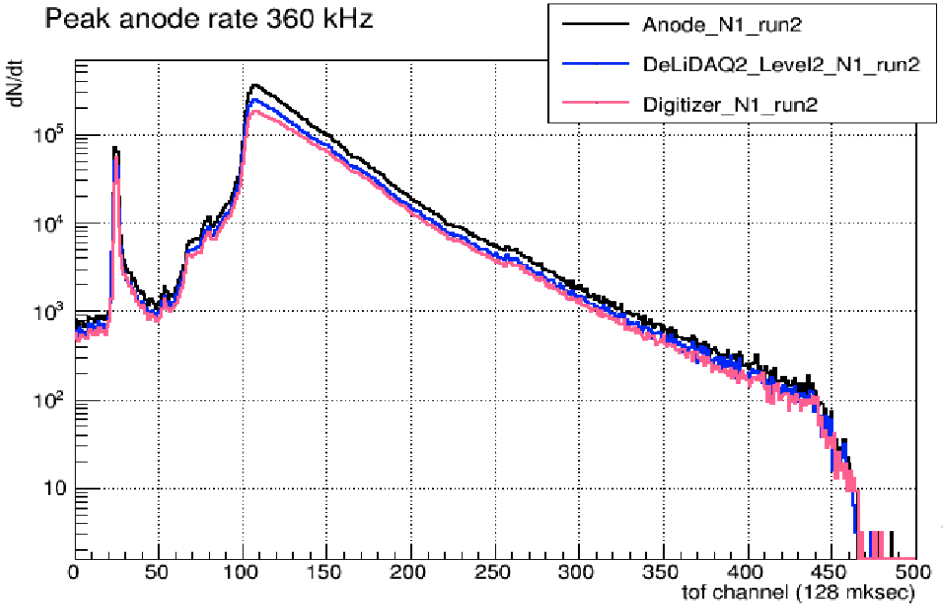

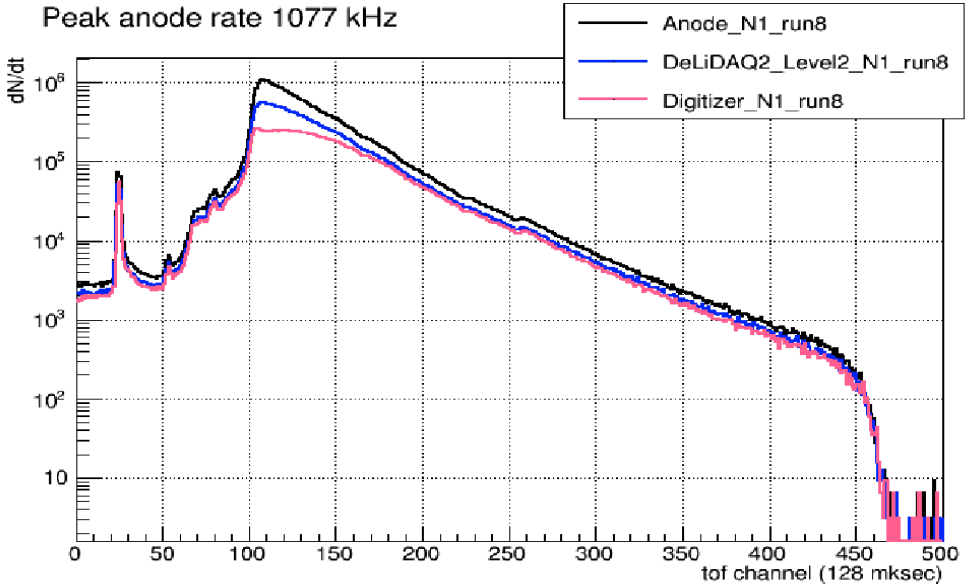

A+D, B+C+D. Typical distortions on the measured TOF spectra of the direct beam of the reactor beam 10.

Comparative study

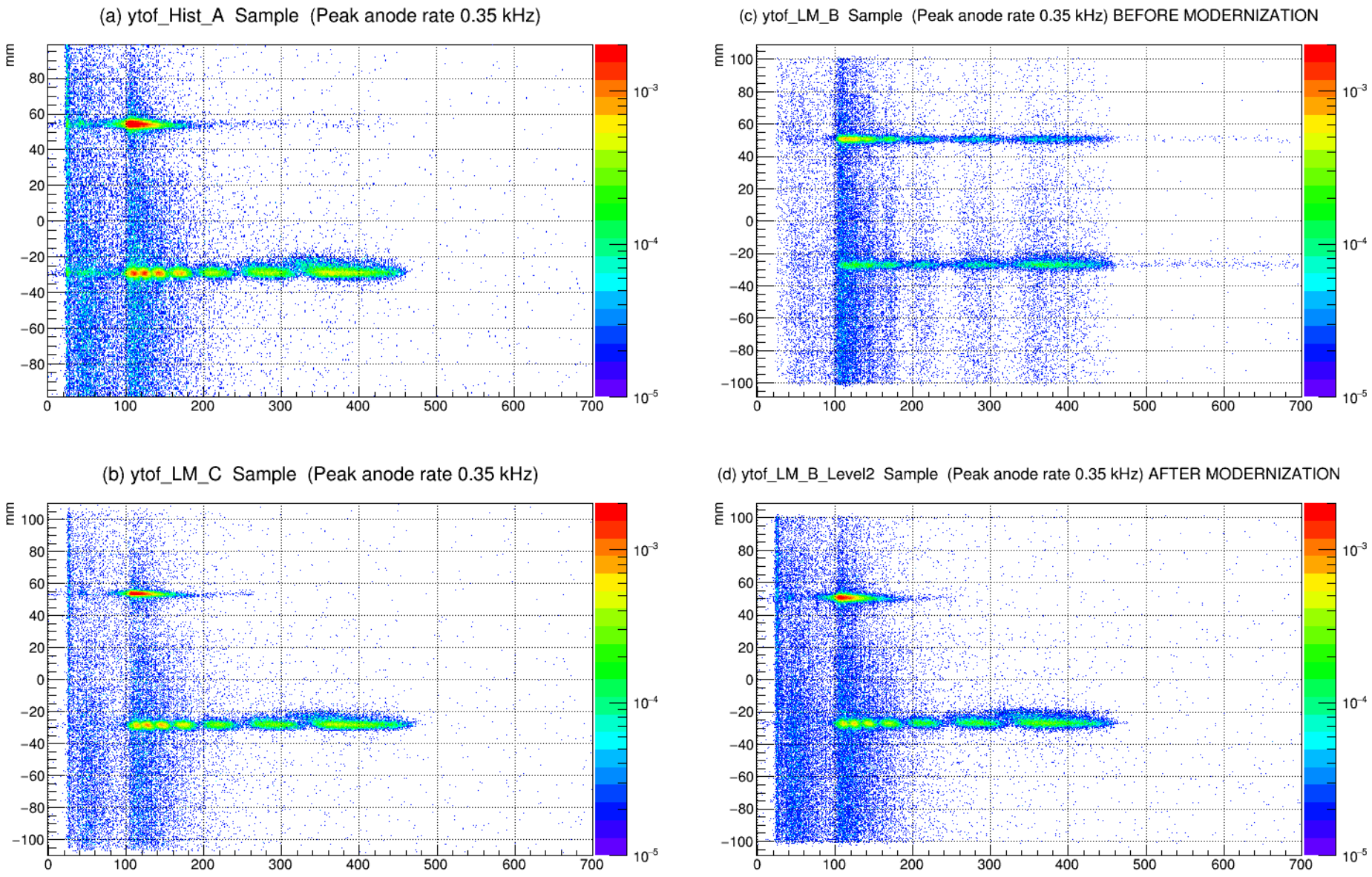

A+B+C. Beam 10: raw y-tof spectra of sample measured with DeLiDAQ-1 (a), with digitizer (b), and with DeLiDAQ-2 using filtering at level FPGA (c), and with DeLiDAQ-2 using filtering at the software level (d).

Comparative study

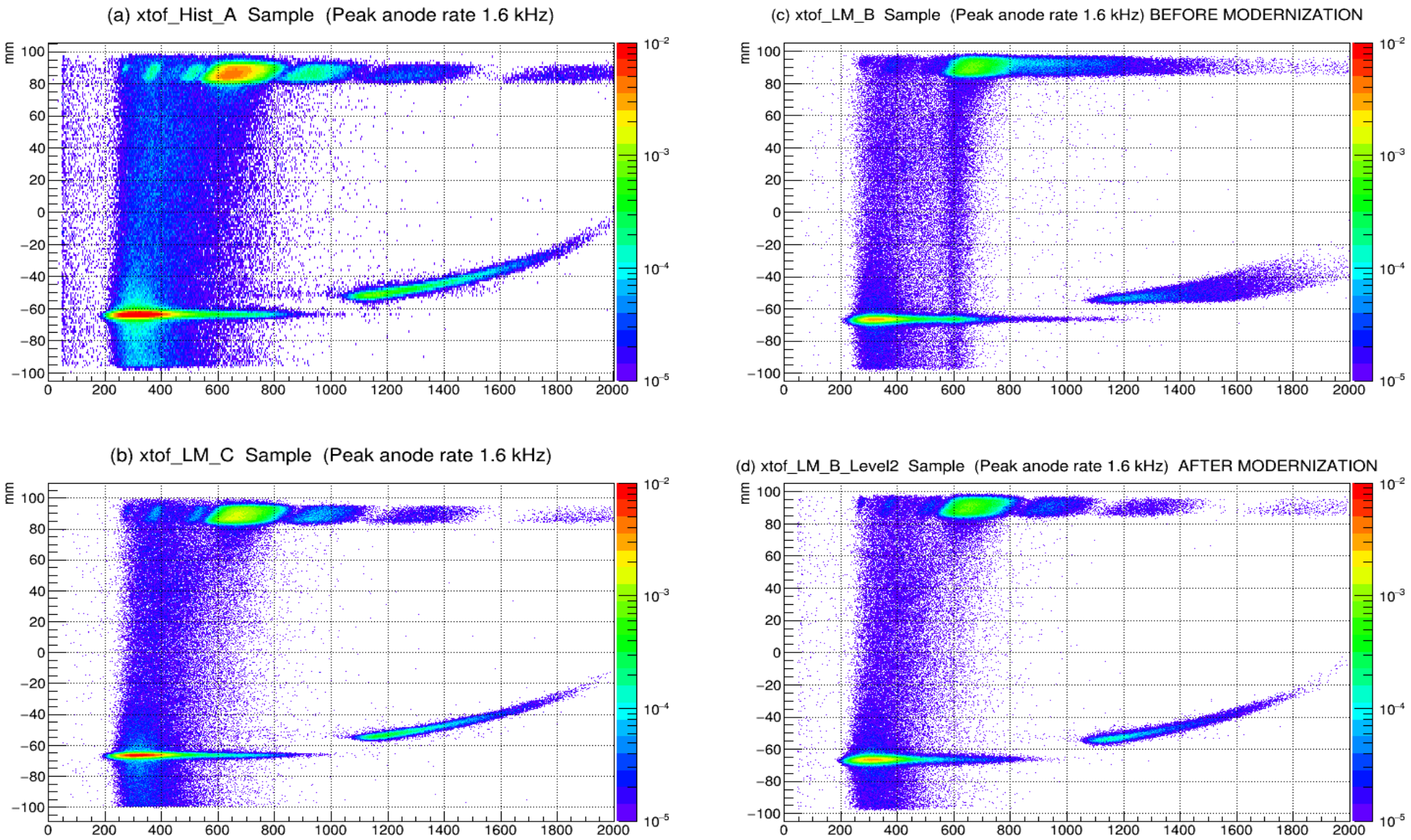

A+B+C. Beam 9 : raw x-tof spectra of sample measured with DeLiDAQ-1 (a), with digitizer (b), and with DeLiDAQ-2 using filtering at level FPGA (c), and with DeLiDAQ-2 using filtering at the software level (d).

Comparative study

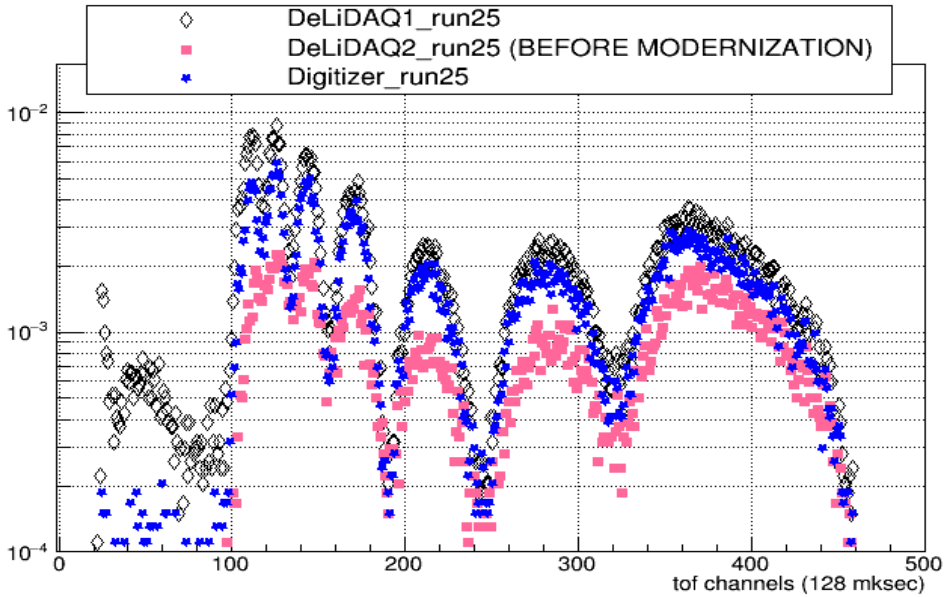

Beam 10

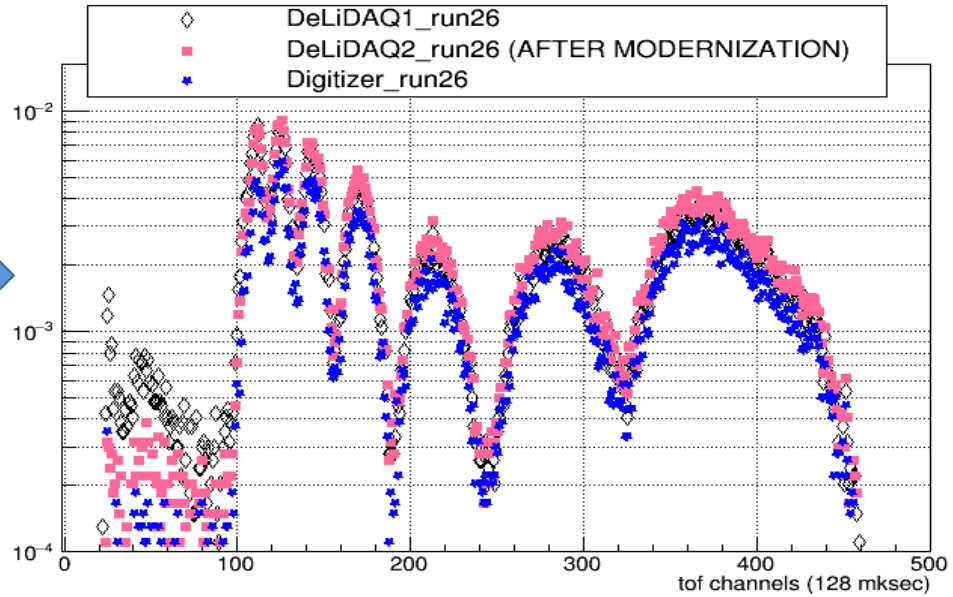

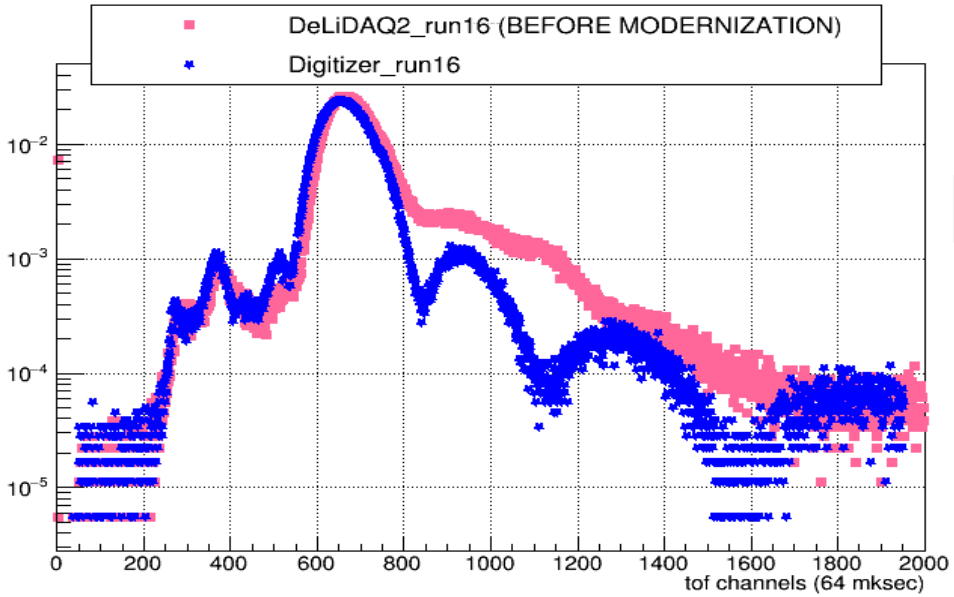

Beam 9

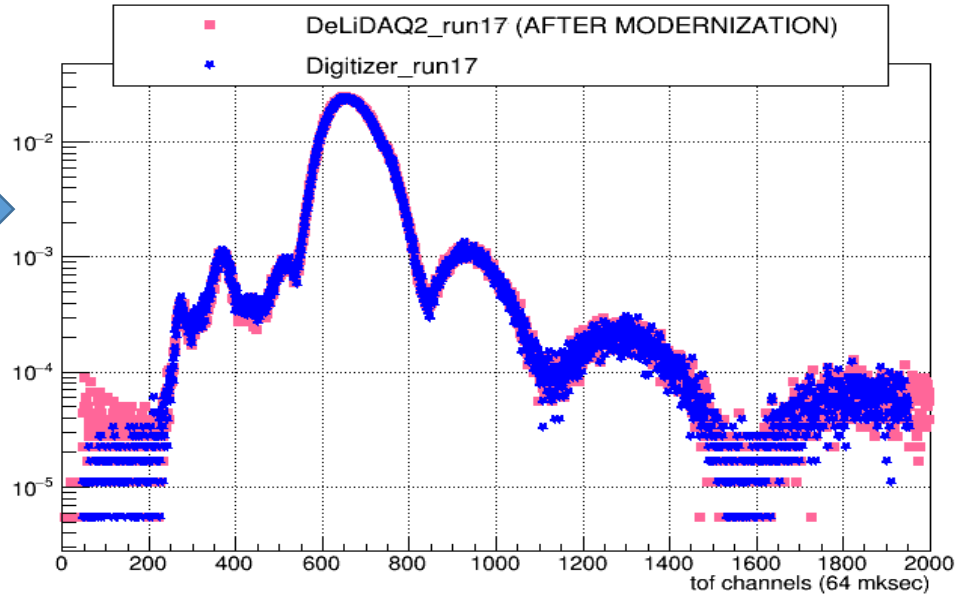

A+B+C. Raw spectra of samples with distortions of spectra from DeLiDAQ-2 (before modernization, left) when using filtering at level FPGA and without such distortions when using filtering at the software level (after modernization, right).

Comparative study

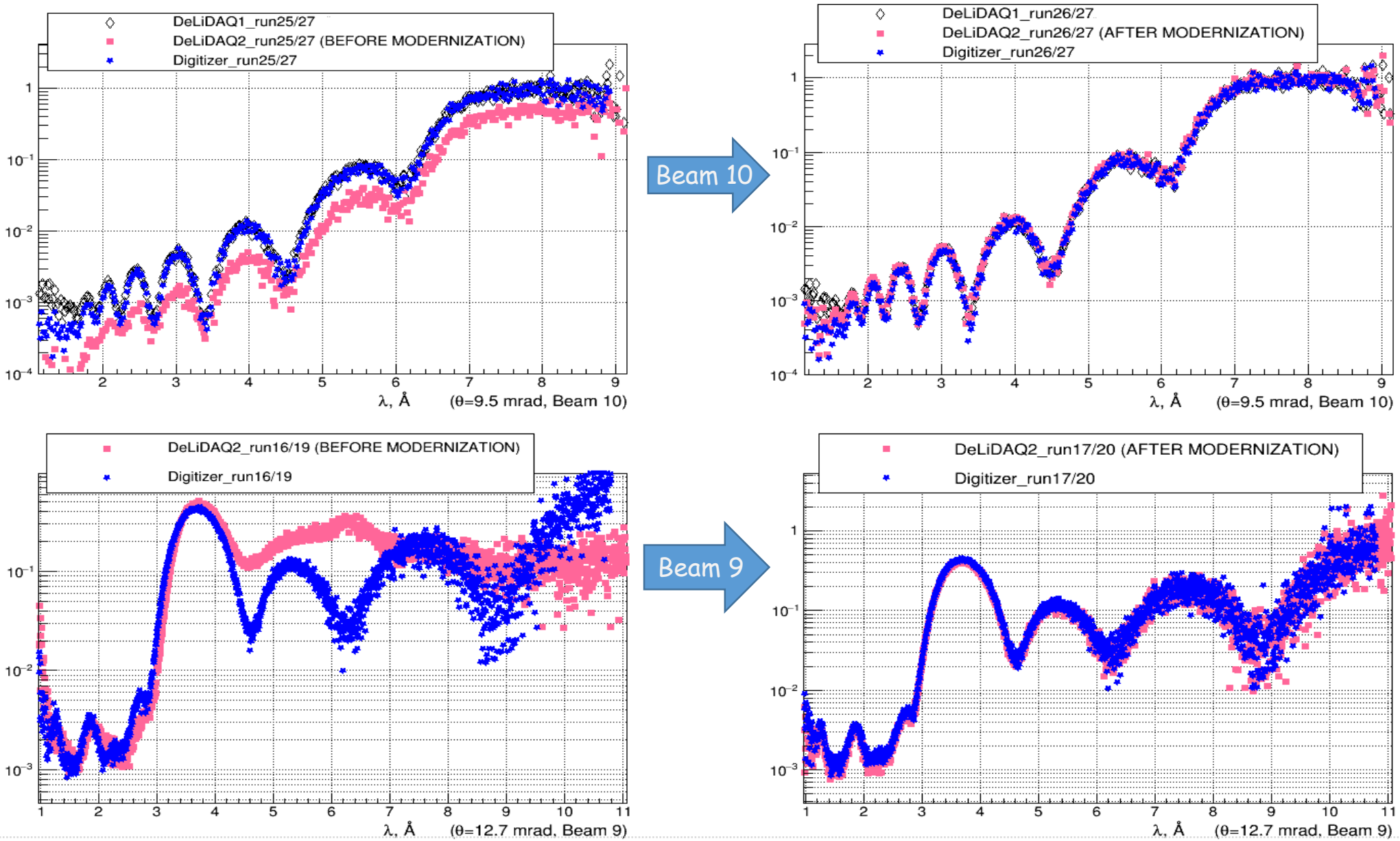

A+B+C. Reflectivity plots with distortions from DeLiDAQ-2 (before modernization, left) when using filtering at the FPGA level and without such distortions when using filtering at the software level (after modernization, right).

Study conclusions

Peak rate: / Mode & System:	0-0.1 kHz	0.1-10 kHz	10-250 kHz	250-360 kHz	360-1200 kHz
Hist_A	OK	OK	OK	TOF: notOK notTOF: OK	TOF: notOK notTOF: OK^
LM_A, LM_A_raw	-	OK	OK	TOF: notOK notTOF: OK	TOF: notOK notTOF: OK^
Hist_B, LM_B (before modernization)	TOF: notOK notTOF: OK	TOF: notOK notTOF: OK	OK	OK	OK
LM_B_Level2 (after modernization)	OK	OK	OK	OK	OK
LM_C	OK	OK	OK	OK^	notOK

A+B+C. The quality of spectra obtained using each system depending on the input loading in peak (evaluated by anode signal). Here "OK^" means that the shape of the spectra is fine, but the integral loss increases significantly.

Study conclusions

- Quality of the spectra does not depend on the average load in the input stream, but on the peak input load.
- DeLiDAQ-1 (overload condition at 250 KHz peak input load) - will soon be replaced by new electronics.
- DeLiDAQ-2 (no overloads up to 1200 KHz) in TOF mode - only list mode with raw sorted events (without TOF it successfully filters events and calculates histograms at FPGA level).
- A digitizer-based system (overload condition at 360 KHz peak input load) – also only list mode (with raw unsorted events), longer processing of raw unsorted events. But - excellent spatial resolution.
- Further developments: the DeLiDAQ-2 system for high-flux measurements and the CAEN N6730 digitizer-based system for high-precision experiments.
- Urgent need to integrate list mode measurements into the experiment control system.

Software task definition

- The study could not be performed without at least minimal integration of all three electronic systems into existing experiment control software. The unified software for experiment control at IBR-2 spectrometers is SONIX+ software package which operates under Windows family of OS. For all three systems the middleware device driver modules have been implemented for execution under the SONIX+.
- The study was performed with help of the set of express-analysis tools, namely ROOT based stand-alone programs and macros, specially developed for processing list mode data and visualization of the results.
- Next step - integration into the existing experiment control software. On this next step the primary part of the express-analysis tools must be embedded into SONIX+, to provide basic work with list mode data. New embedded tools must follow already implemented logics of the SONIX+ for dealing with the data from neutron detectors. The implemented logics consider neutron spectra as 1D, 2D or 3D numerical arrays, that can be visualized or saved to some other formats for further analysis.
- The requirement is to calculate 3D numerical array from the list mode data on the fly in reply to the user request to plot the data.

Software solutions

- The first idea of the design - to use only ROOT to create trees and histograms. For digitizer data the use of tree conception seems to be the only possible solution.
- The corresponding DLL was implemented and started to be used in the form of stand-alone executable with real data from digitizer measured in our study.
- The following problems raised immediately:
  1) slow procedure of sorting the data (to build raw events)
  2) serious restrictions of the size of the resulting 3D histogram
- For our users the size restriction of 3D spectra is very undesirable feature
- We had a hope that the transfer from ROOT 5.34.36 to ROOT 6.18.04 will solve the memory problems, but it does not helped with 3D histograms. But, with ROOT 6 more effective and fast procedure for data sorting can be developed.
- While DeLiDAQ-2 data sorted on the FPGA level, with this list mode data we implemented addition to middleware driver to get the spectra on the fly without use of ROOT, and this solution started to be tested with measured data.

Conclusions

- Significant non-uniformity in time of the neutron flux of the pulsed reactor seriously toughens the requirements and creates additional restrictions for the bandwidth of data acquisition systems
- The presented study defines the regions of applicability of the electronic systems and helps to make the adequate choice of the electronics for time-of-flight measurements with position-sensitive detectors of thermal neutron with delay line.
- List mode measurements become the daily norm for many neutron instruments that previously received data only in the form of ready-made spectra (usually called spectrometers).
- Inquiries from not numerous developers creating ROOT-based software for users of neutron and synchrotron centers (most of which try to avoid to learn new tools) up to now were not taken into account by the ROOT team.
- It would be nice to hear about the appearance of improvements in ROOT, which realized the possibility of a significant increase in the size of its standard histogram classes.